Dimension Guide

Built-in single oven

300 Series

Model:
KOGEE00K

Dimensions

	width	height	depth
Underbench (mm)	560	600	550
Cabinet (mm)	560	590	550
Product (mm)	594	594	569

Underbench

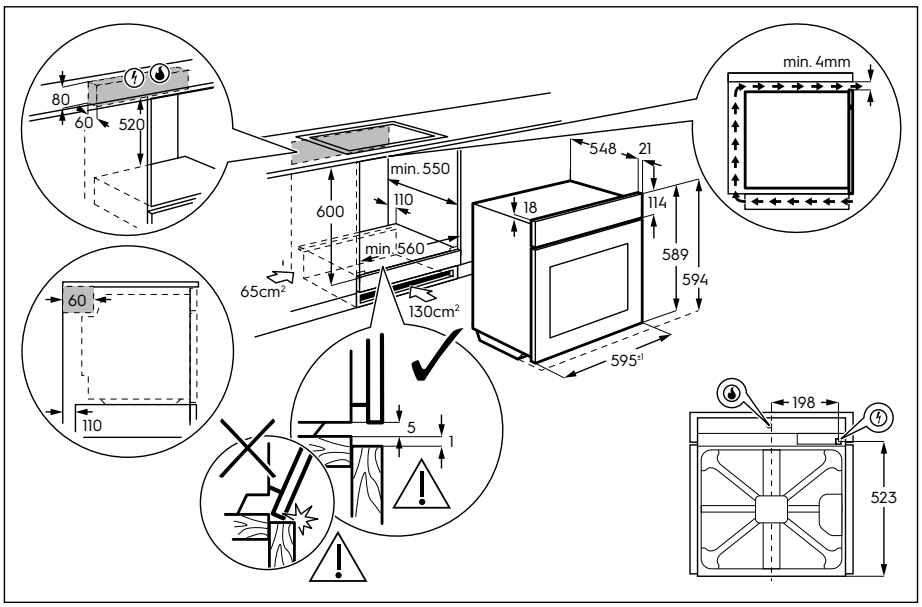

Cabinet

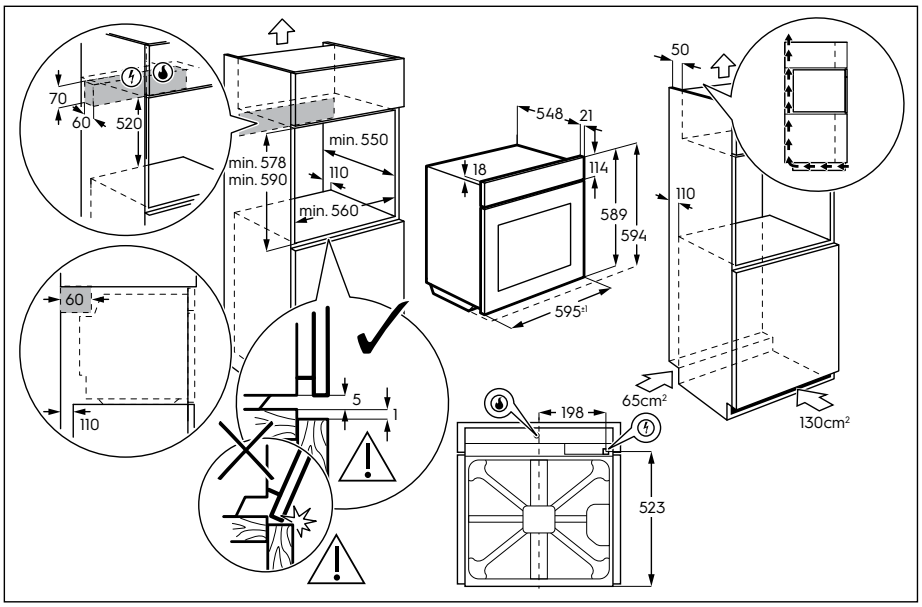

Please note! Dimensions to be used as a guide only. All customers MUST refer to the user manual supplied with the product for detailed installation instructions.

© 2026 Electrolux S.E.A. PTE. LTD. ELX_DIM_ KOGEE00K_Apr26

Electrolux